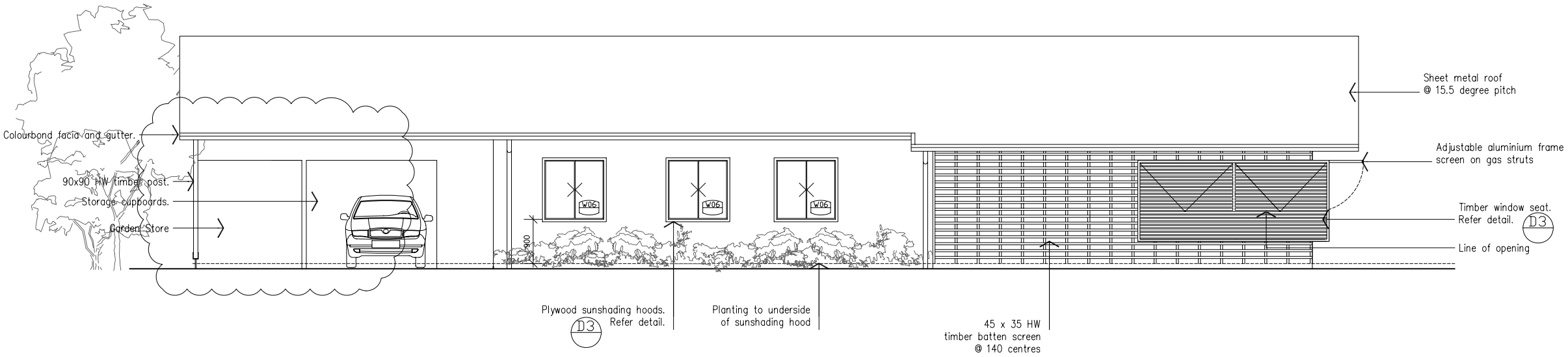

01 - ELEVATION NORTH
SCALE: 1:100

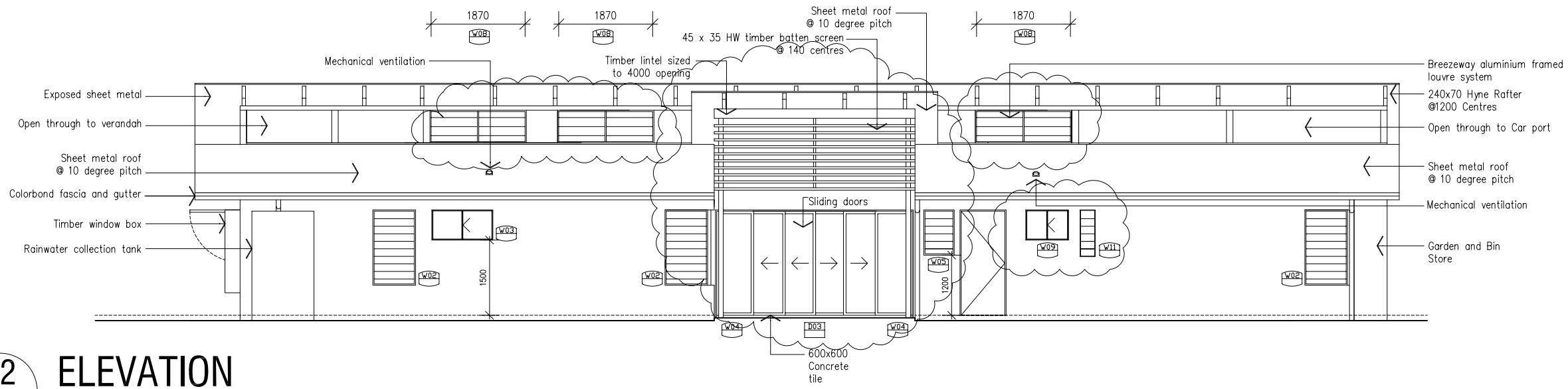

02 - ELEVATION WEST
SCALE: 1:100

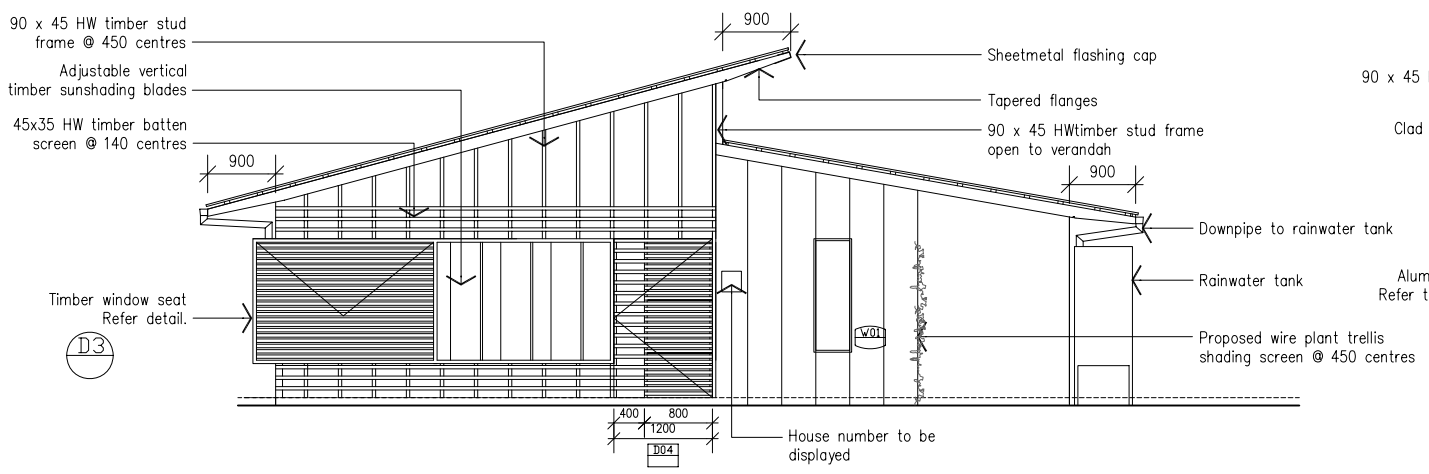

03 - ELEVATION WEST
SCALE: 1:100

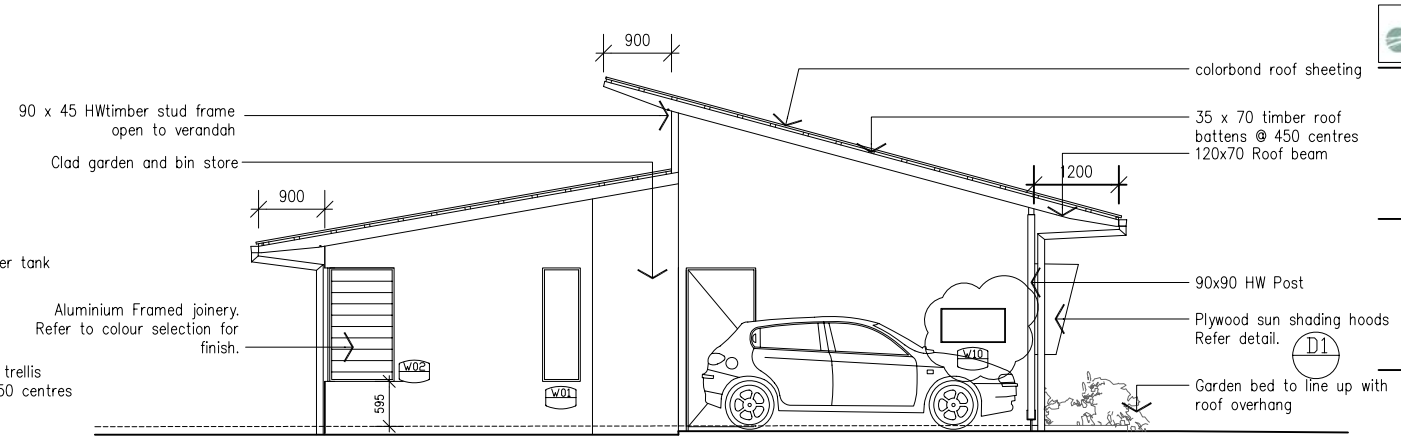

04 - ELEVATION EAST
SCALE: 1:100

rev.	date	details	action
D	04.08.05	Amendment to brief	
C	20.07.05	Amendment to courtyard door type	
B	20.07.05	Amendment to courtyard roof	
A	12.07.05	Building Approval Set	

Architectural Practice Academy
Level 4b 80 George Street Brisbane
GPO Box 2906 Queensland 4001
ph: (07) 3225 8522
fax: (07) 3224 4674
apa@projectservices.qld.gov.au

COPYRIGHT ARCHITECTURAL PRACTICE ACADEMY 2005

MALCOLM MIDDLETON ARCHITECTS

seaspray

Client:
Seaspray
Residential Development
Emu Park QLD

Project:
Proposed Lot 21 House
Seaspray
Residential Development

Title:
Elevations

Scale: 1:100
Date: 26.05.05
Drawn By: JM
Checked: WP
Project No: 14
Bldng No: 01

Drawing No: DD03
Revision: D

STATUS: Design Development